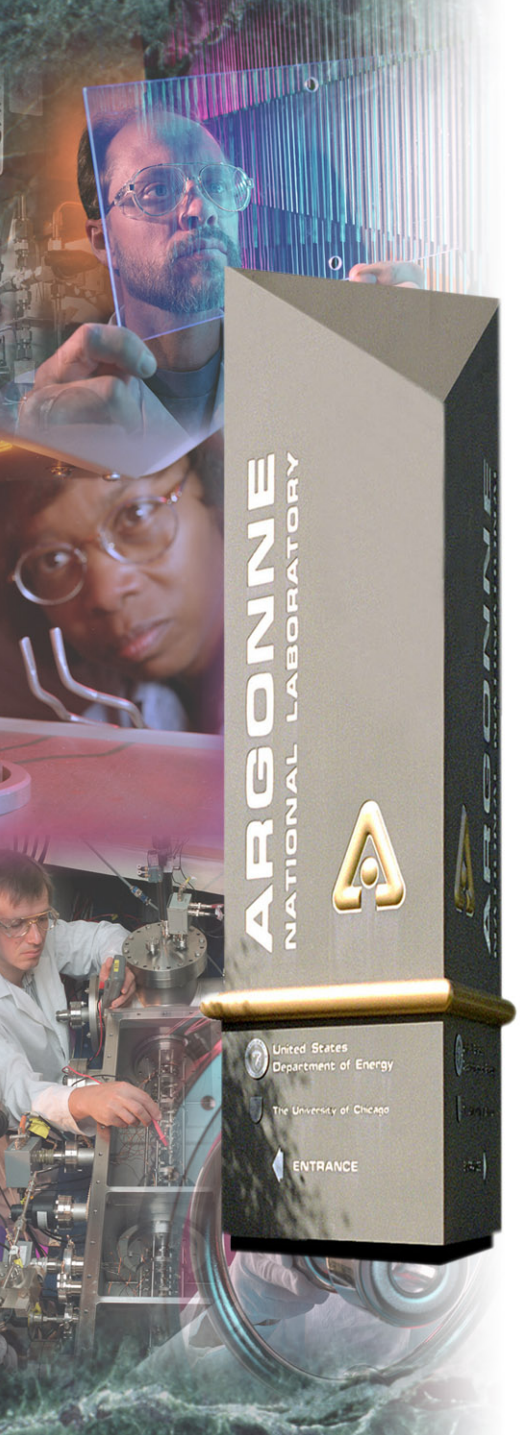

MEDIUM BETA CAVITY AND CRYOMODULE PROTOTYPING FOR RIA

J.D. Fuerst, K.W. Shepard, M.P. Kelly, M. Kedzie
Physics Division

Argonne National Laboratory

Office of Science
U.S. Department of Energy

A U.S. Department of Energy
Office of Science Laboratory
Operated by The University of Chicago

Motivation for Drift-Tube Cavity Prototyping

- **Identified as an R&D priority in Risk/Opportunity Matrix**
  - optimize geometry to maximize accelerating gradient
  - design for manufacturability
    - *reduce refrigeration load & linac length to lower costs*

Cavity Design

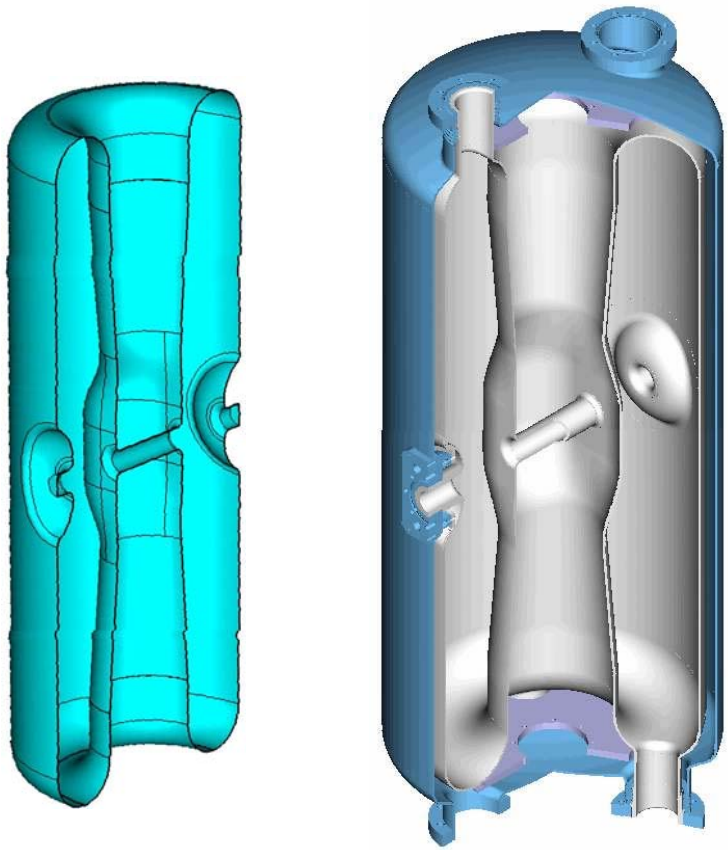

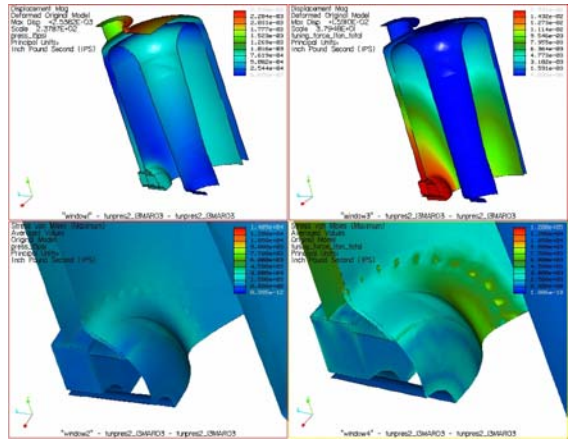

- **double-wall design, 316L SS LHe tank, modified CERN-type Cu braze transition**
- **round corners, coupling port locations facilitate HPWR**

- **geometry is determined using Microwave Studio**
- **transferred to Pro/Engineer for mechanical design**
- **FEA validates design under LHe pressure and tuning loads**

Forming & Machining

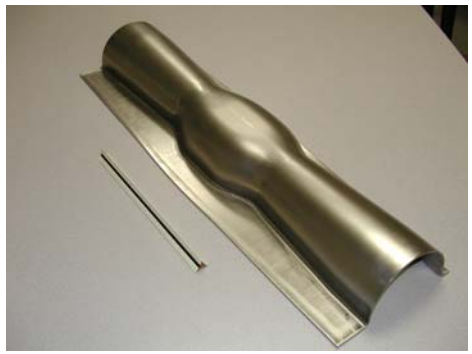

- **forming is done by Advanced Energy Systems, Inc. (AES), Medford NY**
- **aluminum test parts confirm tooling & techniques**
- **final parts formed from 1/8” RRR250 Nb sheet from Wah Chang, Albany OR**
- **forming tools are often used as machining fixtures**
- **tooling is available for production runs**

Electron Beam Welding (EBW)

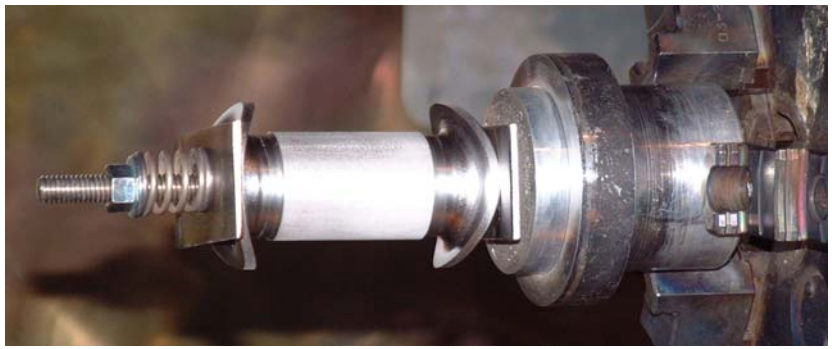

- **EBW performed at Sciaky, Inc., Chicago IL**
- **ANL has worked extensively with Sciaky over the years to develop reliable EBW techniques for high RRR niobium**
- **EBW machines have been modified for niobium service**
- **a wide variety of joints have been parameterized**
- **these techniques are transferable to industry for cavity mass production**

Double-Spoke & Quarter-Wave Fabrication

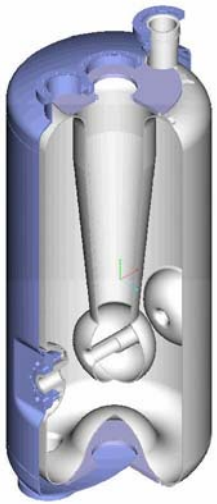

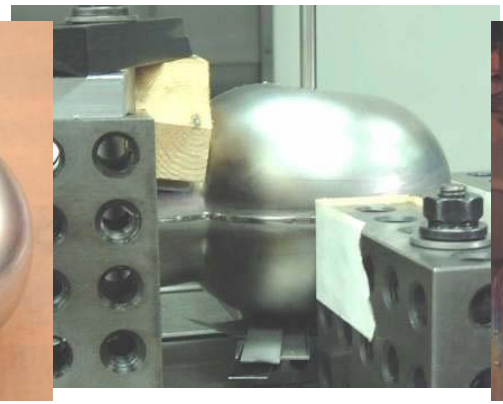

Triple-Spoke Cavity Fabrication

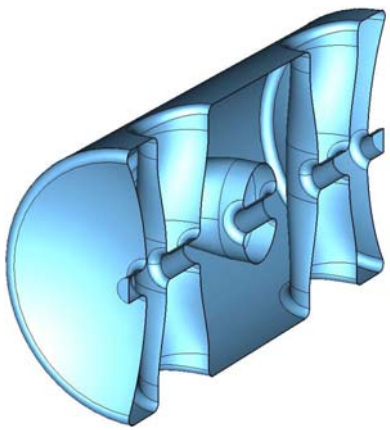

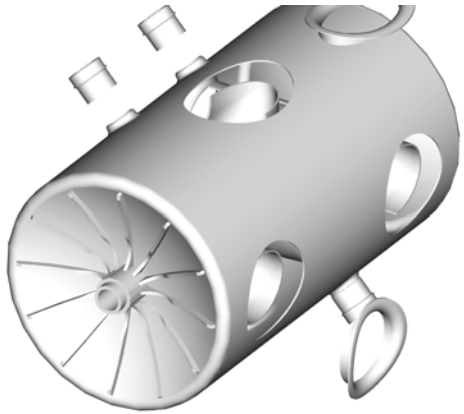

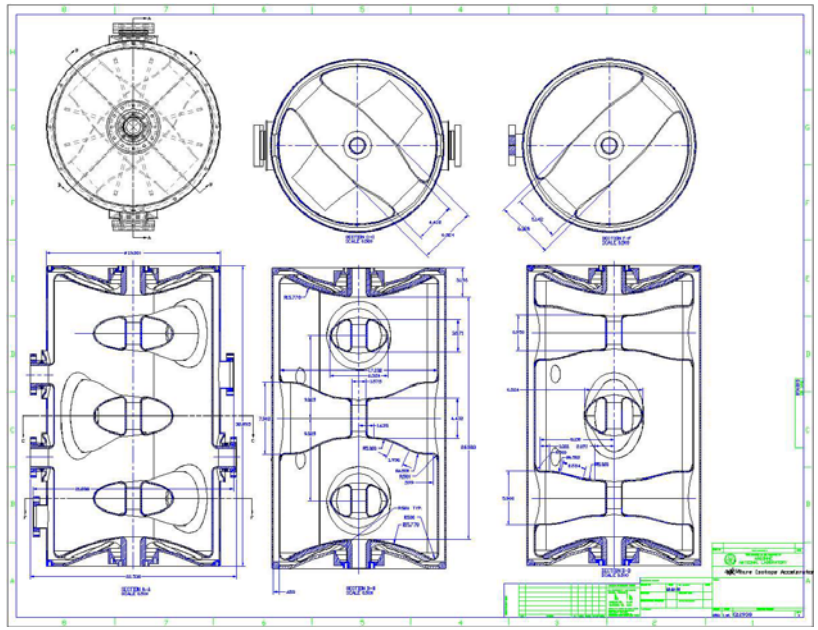

- **uses forming and EBW techniques established with double spoke**
- **spoke contours are elliptical vs. cylindrical**

Niobium-to-Stainless Cu Braze Transition

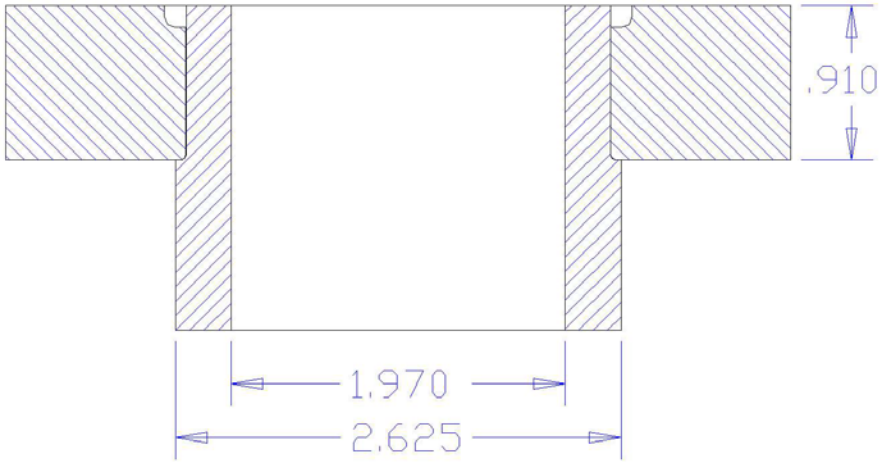

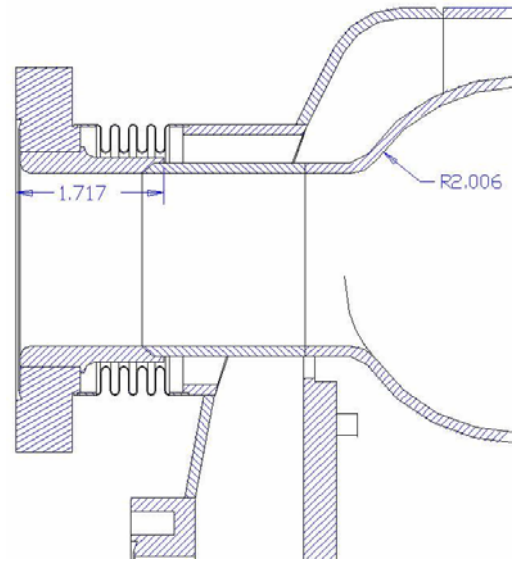

- **modification of established CERN Cu braze technique**
- **single Cu wire at top flows through the joint producing a fillet on the back side**
- **repeated cold shocks/mechanical loading tests verify joint integrity**
- **five units operating on the double spoke cavity**

Box Cryomodule

- designed for separate cavity and cryogenic insulating vacuum spaces
- flexible design suitable for all 4K drift tube structures
- design has been reviewed extensively: JLAB, LANL, DESY
- prototype is under construction

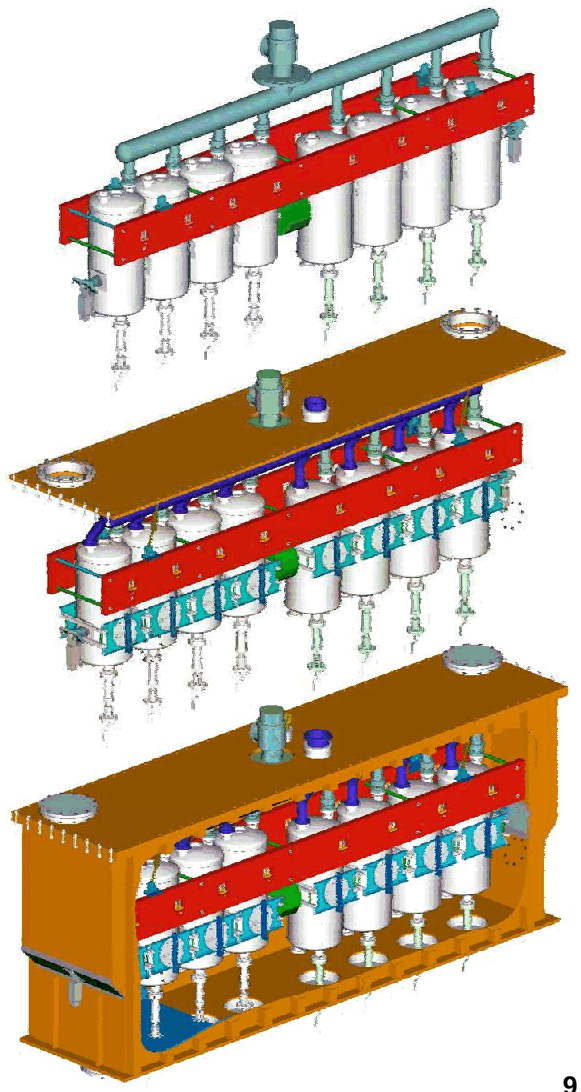

- clean subassembly consists of cavities, spools, beam valves, couplers, vacuum manifold, and support frame
- subassembly is suspended from top plate to attach subsystems (cryogenic lines, slow tuners, instrumentation etc.)
- vacuum vessel tank is pre-assembled with magnetic and thermal shields
- top plate subassembly is lowered into tank

Subsystems: Input Coupler & Slow Tuner

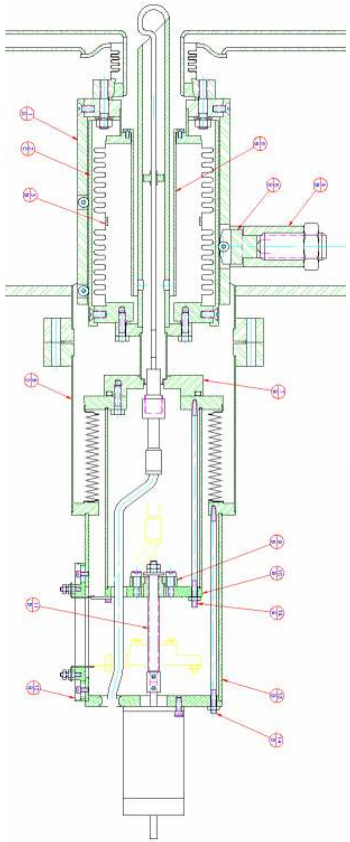

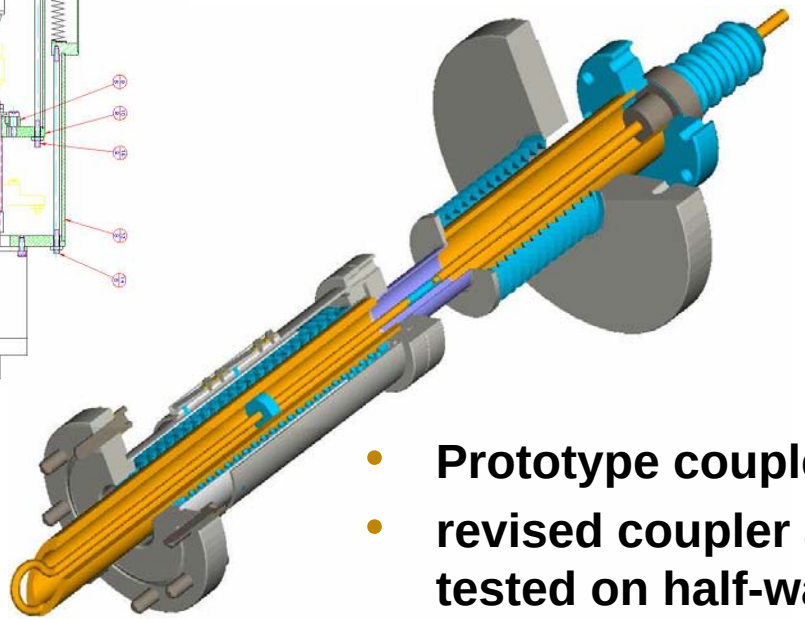

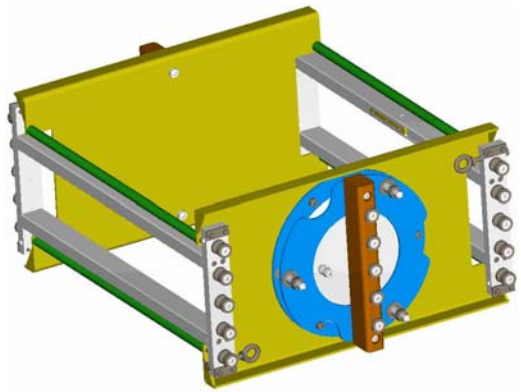

- **Prototype coupler operational on double spoke cavity**
- **revised coupler and pneumatic slow tuner to be tested on half-wave cavity**

Summary:

- ✓ **Half wave, quarter-wave, and spoke cavity prototypes are fully engineered pre-production units.**
- ✓ **Fabrication techniques are established and scale readily to production quantities.**
- ➢ **A cryomodule featuring separate cavity and insulating vacuum spaces is under construction.**
- ➢ **Cryomodule tests with beam are planned as part of an AIP-funded ATLAS upgrade.**