Development of Superconducting RF Cavities for RIA

J.D. Fuerst, M. Kedzie, M.P. Kelly, and K. W. Shepard - ANL

Introduction

Our original proposal was to build and test two prototype superconducting cavities in order to better determine the operating field levels that could be obtained using electro-polishing and clean handling techniques on cavities at the high and low velocity extremes required for RIA. The proposed work would have completed prototyping for the full velocity range of SC cavities required for RIA, and helped to realize the full benefit of recent advances in SRF cavity construction and processing to the cost and schedule of RIA.

To accomplish the above tasks, we requested funding of 1140 $k. The project was funded at 390 $k: consequently, the scope of work was reduced to developing, as far as possible, one of the two proposed cavities, a 345 MHz triple-spoke loaded cavity of geometric beta 0.62. The money was allocated to support 0.8 FTE of staff effort and 200 $k for niobium, design, welding, and machining for this resonator. The triple-spoke cavity was chosen as having the larger cost and schedule impact, since timely development of this cavity can provide a design option for the high-energy section of the RIA driver that reduces the cavity count, improves the beam dynamics and reduces the risks of beam loss, and eliminates the need for sub-atmospheric helium refrigeration.

From the original proposal, for this cavity the proposed task sequence was:

Task	**Time**
1. Detail design	Month 1 - 3
2. Procure Niobium	Month 1 -4
3. Fabricate hydro-forming dies	Month 1 – 5
4. Form and weld niobium	Month 3 –9
5. Complete and process cavity	Month 9-12
6. Test	Month 12 – 15

At this time, as is detailed below, tasks 1 – 3 are complete, task 4 is nearly complete, task 5 is scheduled to be completed by the end of the calendar year, and task 6 will follow on into early calendar year 2005. Some continued funding from the FY2005 RIA R&D program will be required to complete the tests.

Status of Cavity Design and Fabrication

The cavity was designed using numerical simulation to model both the electromagnetic and the mechanical properties. Figure 1 shows a sectioned view of the cavity design developed, and Table 1 details the electro-dynamic properties of the design.

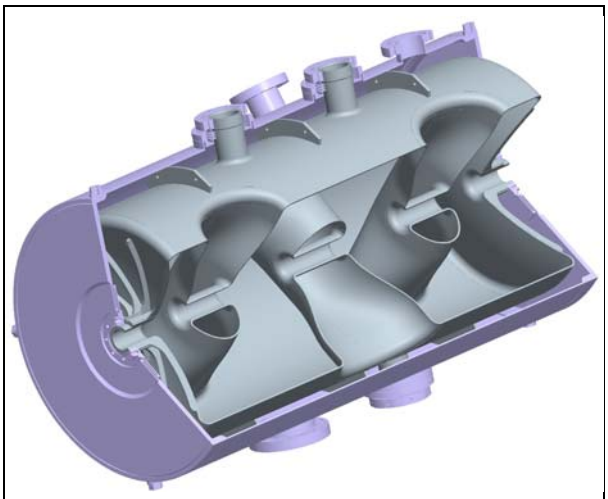

Figure 1. Sectioned view of the 345 MHz β 0.62 triple-spoke cavity showing the niobium shell nested within the stainless-steel jacket.

Table I. Electromagnetic parameters for the 345 MHz, three-spoke-loaded cavity compared with the 805 MHz 6-cell elliptical-cell cavity it will replace.

	3-Spoke	**E-cell**	***units***
Frequency	345	805	***MHz***
Length	81	68	***cm***
β_{Geom}	0.62	0.61	
QRs	93	179	***Ohm***
R/Q	520	279	***Ohm***
Energy	580	330	***mJ***
Epeak	3	2.7	***MV/m***
Bpeak	89	57	***Gauss***

Figure 2. Spoke-half hydroforming dies (left), and the formed and joined spoke halves, together with the spoke end transition pieces (right).

Figure 3. Detail of a completed spoke element with beam-tube spool insert installed

Niobium (RRR > 250) has been procured, all dies have been machined, and all niobium elements have been formed and machined, as is shown in Figures 2 and 3. Engineering of the dies and machining of the niobium was performed by Advanced Energy Systems, in Medford NY.

The major sub-assemblies have been completed by electron-beam welding, as shown in Figure 4. All electron-beam welding has been performed at Sciaky, Inc., with whom the Argonne SRF group has worked closely to develop appropriate techniques for this and other superconducting cavities.

The cavity elements are currently in the final machining step, in which the cavity is being trimmed to length, tuned to frequency, and fitted to the end-cap assemblies in preparation for electro-polishing and the final, closure EB welds.

Figure 4. The major sub-assemblyof the prototype triple-spoke cavity just prior to electropolishing and the final closure welds.

Remaining Tasks

Following this step, the completed niobium assembly will be given a very light buffered chemical polish to remove any oxide or surface contamination resulting from the EB weld process, cleaned by high-pressure water rinsing, and then subjected to the initial cold-tests.

All fabrication steps, except for installation of the stainless-steel helium jacket, are scheduled for completion by the end of calendar year 2004. Cold tests, diagnostics, any required rework, and installation of the jacket will extend into early 2005.