September 16, 2004

Progress Report "Design, construction and test of a one-segment prototype of the RIA Driver RFQ"

P. Ostroumov, A. Barcikowski, F. DePaola, B. Rusthoven, R. Pardo, S.I. Sharamentov, S. Sharma, V.E. Vinogradov, G. Zinkann (ANL), D. Schrage (LANL), J. Rathke (AES)

The initial acceleration of heavy-ion beams in the driver linac of the Rare Isotope Accelerator (RIA) Facility will be provided by a four-meter long room temperature RFQ operating at 57.5 MHz. The principal specifications of the RFQ are: 1) maintain extremely low longitudinal emittance formed by the multi-harmonic buncher; 2) stable operation over a wide range of voltage for acceleration of various ion species needed for the RIA targets; and 3) simultaneous acceleration of two-charge states of ions with masses above 180. CW operation of an accelerating structure leads to a number of requirements for the resonators such as high shunt impedance, efficient water cooling of all parts of the resonant cavity, mechanical stability together with precise alignment, reliable rf contacts, a stable operating mode, and fine tuning of the resonant frequency during operation. The proposed accelerating structure for the CW low frequency RFQ requires prototyping due to the larger transverse cross-section and unique vane shape compared to previous CW RFQs. Successful test of the RFQ prototype over a wide range of power levels (by a factor of 70) will demonstrate the feasibility of acceleration of masses from protons up to uranium in a single RFQ. Despite considerable experience in the brazing technique at ANL, AES and LANL, the construction and full power testing of the engineering prototype of a single segment of the 57.5 MHz RFQ is required. The successful test of the RFQ prototype will provide numerous benefits for the overall RIA driver linac:

- Reduce risk and contingency in construction of the RIA driver linac;
- Provide a complete set of detailed drawings for fabrication of individual segments of the RFQ;
- Minimize the timeframe for construction and commissioning of the RFQ for the driver linac;
- Provide the possibility for the advanced tests of the two-charge state acceleration in the Front End of the driver linac.

The mechanical and rf design of the RFQ prototype has been done on the basis of ANL, LANL and AES experience in designing and testing of high frequency CW RFQs for various applications. The ANL infrastructure is being used for the final mechanical, vacuum and rf test of the RFQ prototype. The work for material purchase and fabrication started in February 2004 as soon as we received the project approval. One-year plan has been developed to design and build one-segment prototype of the continuous wave (cw) 57.5 MHz RFQ resonator by February 2005. Due to the restricted funding, the R&D work in 2004 has been concentrated on the fabrication of the resonator parts and preparation for the final assembly, finish machining and brazing. Current progress in the work being performed indicates that the resonator can be placed under the vacuum by February 2005 if continued funding is available early in FY2005.

During 2004 we have made substantial progress in completion of full set of manufacture drawings, establishing of the high-temperature hydrogen braze technology, and machining of the resonator parts. Significant contributions have been made by LANL and AES engineers to provide state-of-the-art fabrication technology for the OFE copper resonator. Table 1 lists major steps of the work related to the fabrication and shows current status. Basically, we are about to start final machining of the resonator vanes and quadrants and to braze the whole assembly with the help of an outside vendor. The total amount of $195K allocated for ANL (see Table 2) has been spent to date completely; $100K has been spent to support manpower and $95K on purchases and machining. The residual amount of $22K at LANL will be allocated to complete full set of drawings including vacuum, rf transmission and cooling system befor the end of calendar year. However, to complete assembly of the resonator and to provide low-power rf and vacuum test additional funding of $165K is required. This amount includes $105K to complete fabrication and $60K to support 6-month effort of a technician. If this funding is provided, the tests can be completed by February 2005. The final high-power tests of the resonator require purchasing of a 20-kW, 57.5-MHz CW amplifier and construction of a full power test stand. This task can be completed in FY2005 if appropriate funding is available. We are going to write a proposal for this according to the DOE RIA R&D solicitation.

Figure 1 shows a general view of the RFQ when completed. The right picture of Fig. 1 presents an exploded view of major RFQ resonator parts that will be brazed together in a large high-temperature furnace in hydrogen atmosphere using Cusil alloy (72Ag-28Cu). To verify correct engineering choice of the brazing seams and alloy we have performed a braze test for OFE copper pieces shown in Fig. 2. The

tests have confirmed the particular design of grooves for the alloy and overall brazing procedure. The brazed seams have been tested for vacuum and structural stability and have shown expected performance. After the purchase of OFE copper for the vanes, quadrants and flanges, the material samples were sent for chemical analysis in terms of oxygen content. In some samples the oxygen content exceeded standard limitations and we have done 'blister' test of the material samples at ANL central shop. These tests have shown that the purchased OFE copper material is suitable to proceed with the high-temperature brazing. As is seen from Table 1 all manufacture steps are completed except final machining and the following assembly of the resonator. Figure 3 shows end caps and quadrants in the machine shop before they were shipped to ANL. The reader can find more details about the progress in RFQ fabrication and assembly on the web-site of our group [1].

Table 1. Fabrication status of the RFQ resonator.

	Task name	Cost ($)	Status
1	Material chemical analysis	4,615	Completed
2	Braze tests	16,219	Completed
	Materials	3,700	Completed
	Machine, braze, evaluate	12,519	Completed
3	Vanes	82,870	December 2004
	Material purchase	24,750	Completed
	Pre-brazing machining	13,320	Completed
	Braze plugs	4,800	In progress
	Finish machining	40,000	December 2004
4	Quadrants	38,032	December 2004
	Material purchase	9,000	Completed
	Pre-brazing machining	4,232	Completed
	Braze plugs	4,800	In progress
	Finish machining	40,000	December 2004
5	Plugs, studs, tubes	4,000	Completed
	Machining		Completed
6	Body flanges	8,475	Completed
	Material purchase	6,475	Completed
	Rough machining and anneal	2,000	Completed
	Finish machining	4,000	Completed
7	End caps	10,746	Completed
	Finish machining	10,746	Completed
8	Lifting fixture	10,150	Completed
	Finish machining	10,150	Completed
9	RFQ assembly	20,000	January 2005
	Braze alloy	4,500	
	Pre-brazed machining	3,000	
	Braze assembly	5,000	
	Finish assembly	7,500	
10	Final test of the resonator		February 2005
	Low-power rf test		February 2005
	Vacuum test		February 2005
	TOTAL FABRICATION COST TO DATE	95,857	

Table 2. Funding and expenditure

	TOTAL	ANL	LANL
Funding ($K)	225	195	30
Expenditure to date	203	195	8

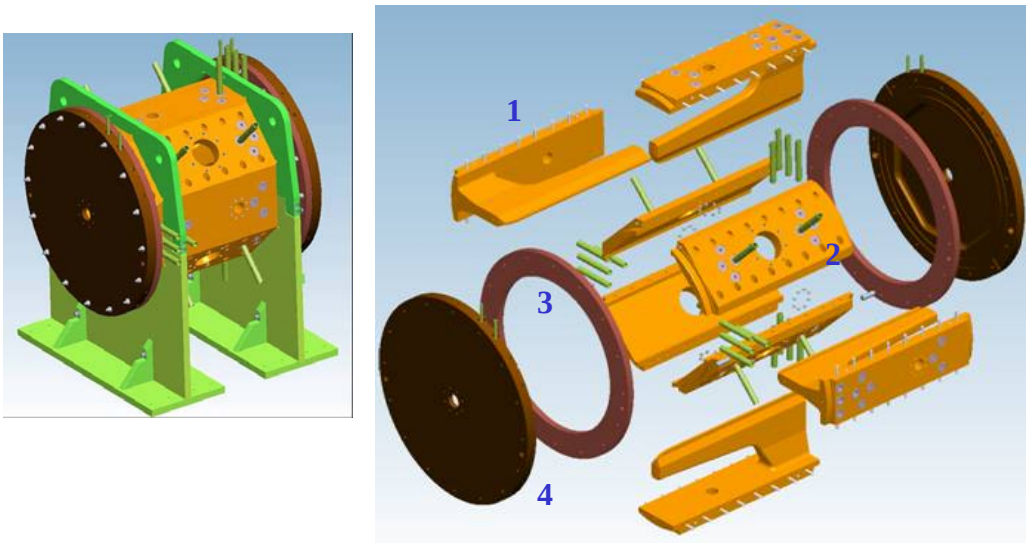

Figure 1. Engineering 3-D model of the one-segment RFQ assembly (on the left) and exploded view (on the right). 1. Vanes; 2. Quadrant plates; 3. Main flanges; 4. End caps.

Figure 2. One of the braze samples (on the left) and brazing grooves and sockets of the sample (on the right).

Figure 3. End cap (on the left) and quadrants (on the right) partially machined.

References

1. http://www.aps.anl.gov/asd/me/, click on ‘miscellaneous’ and further on ’RIA project’.