September 14, 2004

FY2004 Progress Report
RIA Superconducting Drift Tube Linac R&D
(R&D Categories: Driver & Post-Accelerator Linacs)

T.L. Grimm
National Superconducting Cyclotron Laboratory
Michigan State University
East Lansing MI

1. SC-DTL Cavities for RIA

A four year program for FY2002-2005 is underway to prototype and test all superconducting non-elliptical cavity types and superconducting focusing elements necessary for both the RIA driver and post-accelerator linacs. The superconducting drift tube linac (SC-DTL) is a key element of the RIA driver linac, providing the low beta ($\beta = v/c$) beam acceleration from β~0.025 (0.3 MeV/u) to β~0.4 (85 MeV/u). The same low-β cryomodules will be used for the post accelerator, which greatly reduces the complexity and required spares for RIA. For acceleration from 85 MeV/u to greater than 400 MeV/u, superconducting 805 MHz elliptical cavities with room temperature quadrupoles are used.

Only three cavity types are needed to cover the low-β section, which reduces the number of elements to be developed and the number of spares for reliable operation. The three cavity types are shown in Figure 1. The first cavity type with a frequency of 80.5 MHz was chosen based on an existing Legnaro quarter-wave resonator (QWR) [1] that uses a passive mechanical damper to control microphonics instead of the voltage controlled reactance (VCX) tuner. The VCX tuner is required for QWRs with frequencies below 80 MHz. The VCX tuner maintains resonance by switching a reactance in and out of the cavity circuit, and therefore induces an inherent phase jitter of ±1º [2,3]. This phase jitter significantly blows up the longitudinal emittance such that the acceptance of the 805 MHz elliptical section is marginal or unacceptable [4]. For the 80.5 MHz option, tighter phase regulation of ±0.25º reduces the emittance growth to acceptable levels [5].

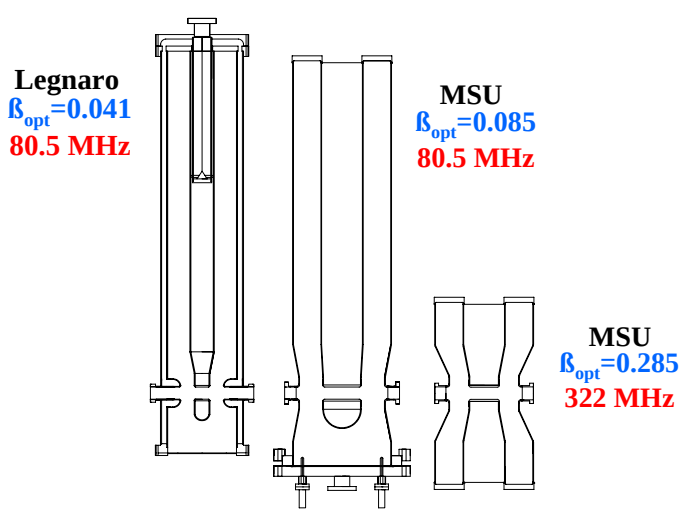

Figure 1. SC-DTL cavities for the RIA driver and post-accelerator linacs

All of the cavities have a 3 cm beam aperture and isolation of the beam vacuum from the cryostat vacuum as is standard for elliptical cavities. Since the first cavity type, the β=0.041 QWR, is very similar to an existing Legnaro design, only two SC-DTL cavities with the same diameter inner and outer conductor need to be developed. The second cavity type is an 80.5 MHz β=0.085 QWR that will have reduced microphonics due to the larger diameter. A prototype of this cavity was fabricated and tested in the Fall 2003, and significantly exceeded the required quality factor and accelerating field [6]. The final cavity type is a 322 MHz β=0.285 half-wave resonator (HWR). A prototype 322 MHz HWR was successfully tested in 2002, and significantly exceeded the required quality factor and accelerating field [7].

2. SC-DTL Cryomodule R&D

The RIA cryomodules, including tuners and superconducting solenoids, have been designed and are based on the rectangular cryomodule for 805 MHz β=0.47 elliptical cavities [8]. A prototype with each cavity type and focusing elements is shown in Figure 2. The prototype will allow demonstration under realistic operating conditions. Issues such as cavity performance, power couplers, tuners, microphonics, and shielding of stray magnetic field from focusing elements will be tested. Included in the prototype is a superferric quadrupole that could replace the 9 T solenoids presently envisioned for RIA [9].

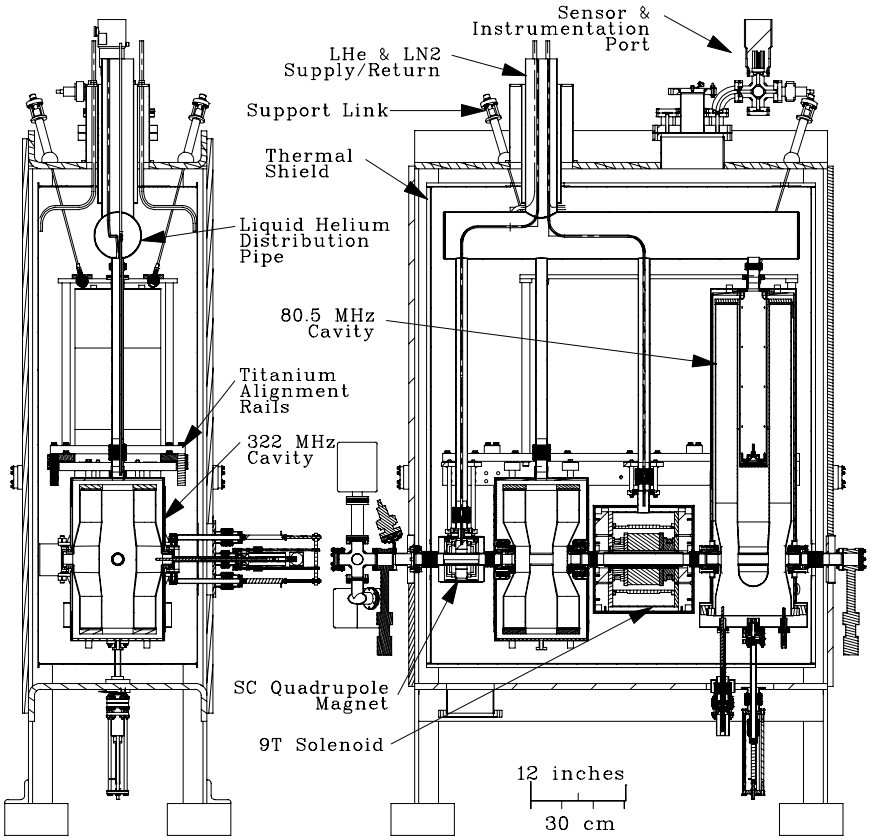

Figure 2. Prototype cryomodule for demonstrating all SCDTL cavities and superconducting quadrupoles and solenoids (end and side view).

3. Summary of the R&D expenditures and schedule

To date, the majority of the funds for this work have been from Michigan State, but those funds are no longer available. In FY2003 $70k and in FY2004 $60k was allocated from DOE. The FY2004 DOE funds were received in the summer of 2004 and will be spent by early 2005. They have been used for the design of the prototype cryomodule. Table 1 shows the breakdown for an additional $777k required to complete and test the low-β prototype cryomodule. By the end of 2005, drift tube linac R&D will be complete, and the driver and post-accelerator linac designs and production plans can be finalized.

Table 1. Proposed budget to complete the SCDTL R&D.

R&D TASK	FY05(k$)
80.5 MHz β=0.085 QWR	
tuner and couplers	20
passive mechanical damper	10
322 MHz β=0.285 HWR	
tuner and couplers	20
9 T superconducting solenoid	30
Horizontal Cryostat	
Design (1 FTE)	113
Cryostat components	150
Cryostat assembly (2 FTE)	217
Testing (2 FTE)	217
TOTAL	**777**

4. References

[1] "Completion of the LNL Bulk Niobium Low Beta Quarter Wave Resonators", in *Proceedings of the 9th Workshop on RF Superconductivity*, Santa Fe, NM (1999).

[2] "Long-Term Operating Experience for the ATLAS Superconducting Resonators", R. Pardo, G. Zinkann, in *Proceedings of the 9th Workshop on RF Superconductivity*, Santa Fe, NM (1999).

[3] "Development of a Medium-Energy Superconducting Heavy-Ion Linac", *Phys. Rev. ST Accel. Beams* **5**, 030101 (2002).

[4] "End-to-End Beam Dynamics Simulations for the ANL-RIA Driver Linac", P.N. Ostroumov, in *Proc. of the 22nd Int. Linac Conference*, Lübeck, Germany (2004).

[5] "Comparison of Elliptical and Triple-Spoke Cavities for the Rare Isotope Accelerator", V. Andreev, Y. Cho, C. Compton, M. Doleans, D. Gorelov, T.L. Grimm, W. Hartung, M. Johnson, F. Marti, S. Schriber, X. Wu, R. C. York, Q. Zhao, NSCL-RIA-2004-001 (Jan. 2004).

[6] "Niobium Quarter-Wave Resonator Development for the Rare Isotope Accelerator", J. Bierwagen, S. Bricker, J. Colthorp, C. Compton, T. Grimm, W. Hartung, S. Hitchcock, F. Marti, L. Saxton, R. York, and A. Facco, in *Proceedings of the 11th Workshop on RF Superconductivity*, Travemunde, Germany (2003).

[7] "Experimental Study of a 322 MHz v/c=0.28 Niobium Spoke Cavity", T.L. Grimm, J. Bierwagen, S. Bricker, C.C. Compton, W. Hartung, F. Marti, R.C. York, in *Proc. of the 2003 IEEE Particle Accelerator Conference*, Portland, OR (2003).

[8] "Cryomodule Design for the Rare Isotope Accelerator", T.L. Grimm, W. Hartung, M. Johnson, R.C. York, P. Kneisel, L. Turlington, in *Proc. of the 2003 Particle Accelerator Conference*, Portland OR (2003).

[9] "A Superferric Quadrupole for use in an SRF Cryomodule", A.F. Zeller, J.C. DeKamp, A. Facco, T.L. Grimm, J. Kim, and R. Zink, Proc. of the 17th Int. Conf. on Magnet Technology, Geneva, Switzerland, 2001, published in IEEE Trans. on Applied Superconductivity, 12(1) p. 329 (2002).