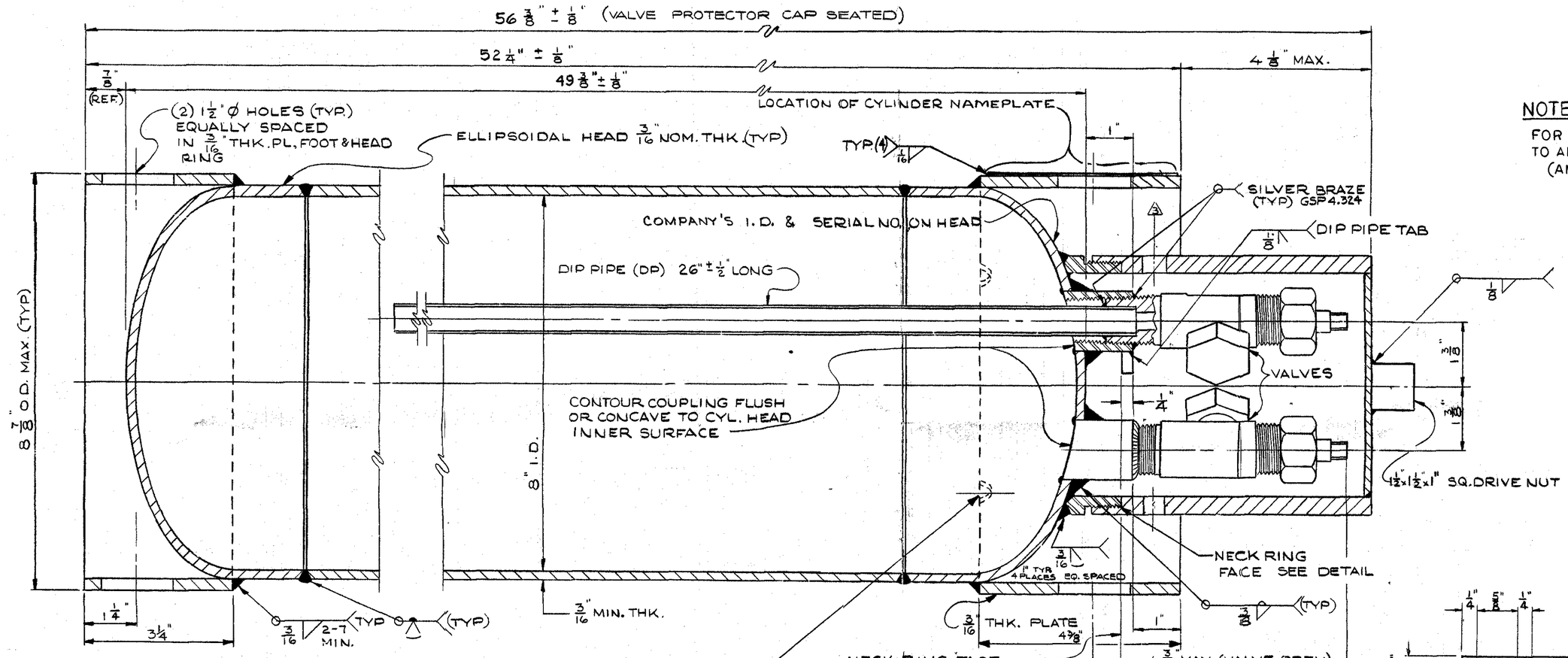

SECTION A-A

NOTE: 4

FOR CYLINDER MATERIAL REFER TO ANSI SPECIFICATION 14.1-1982 (ANSI 14.1-1982)

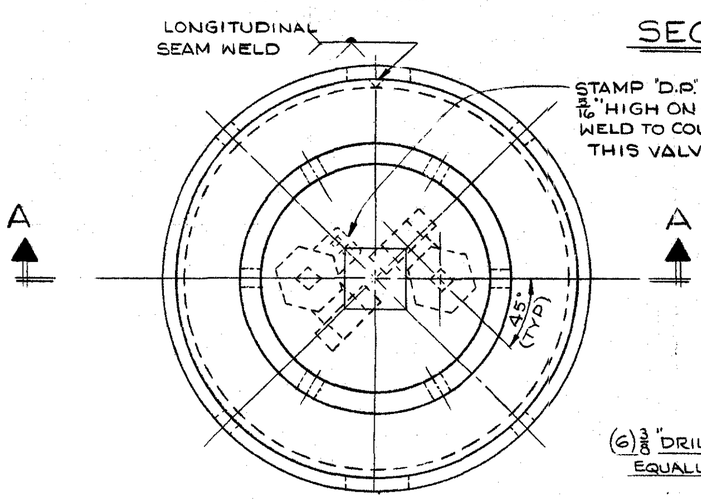

PLAN

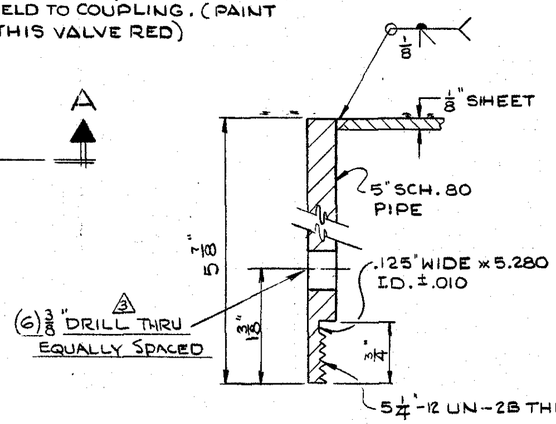

VALVE PROTECTOR CAP DETAIL

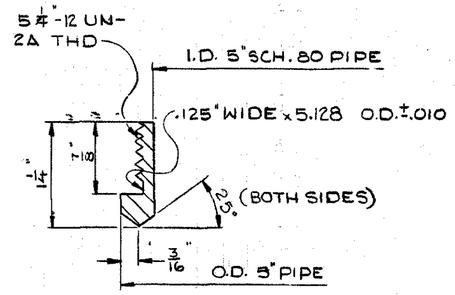

NECK RING DETAIL

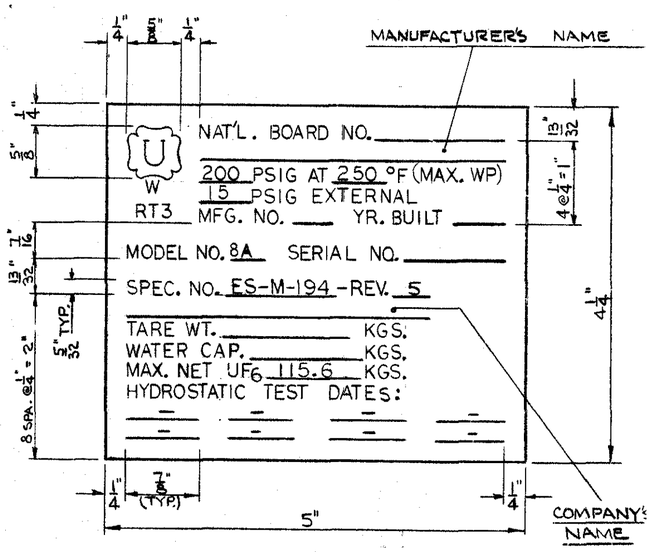

3 CYLINDER NAMEPLATE DATA

FULL SCALE

NOTE:

DIMENSIONAL TOLERANCE ± 1/16 UNLESS OTHERWISE SPECIFIED
ANGULAR TOLERANCE ± 2°

UF6 CYLINDER MODEL 8A