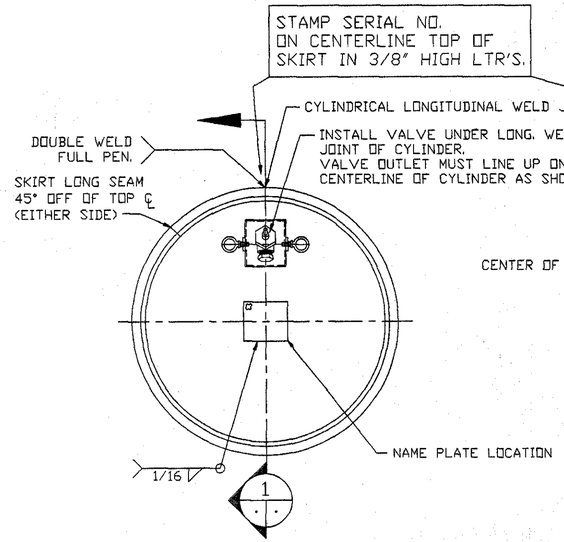

VALVE END
MODEL 30B UF6 CYLINDER

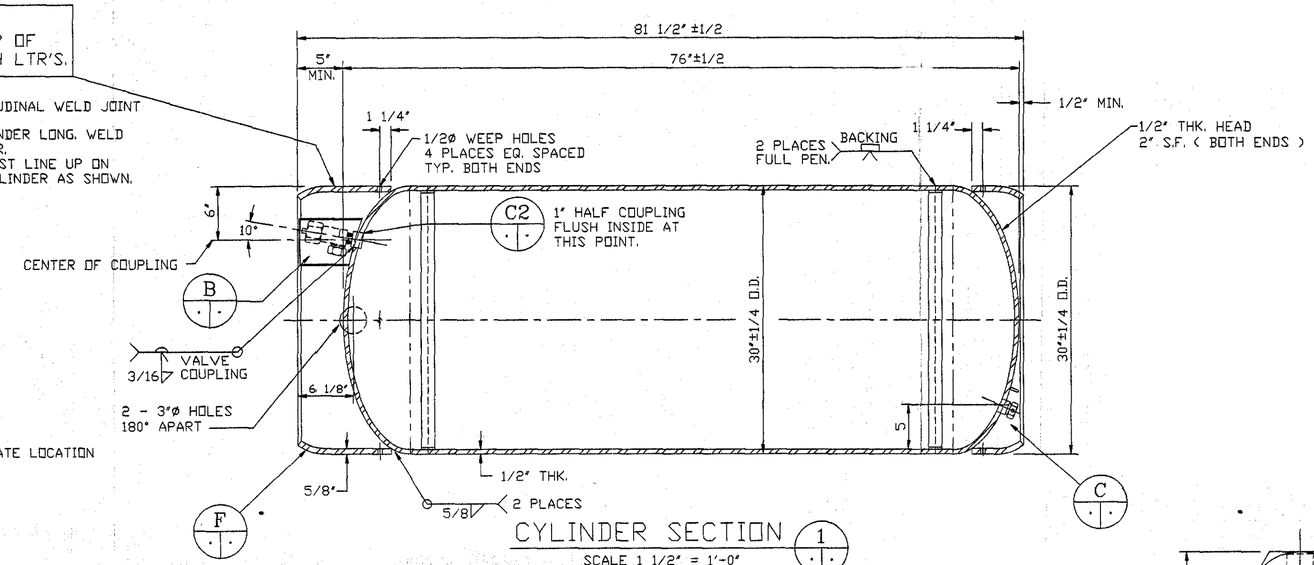

CYLINDER SECTION 1
SCALE 1 1/2" = 1'-0"

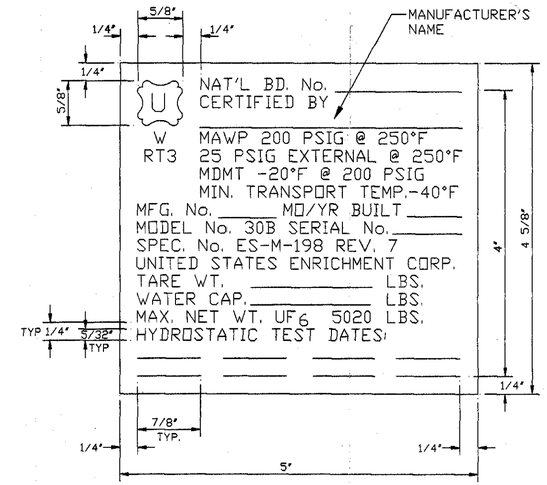

CYLINDER NAMEPLATE DATA

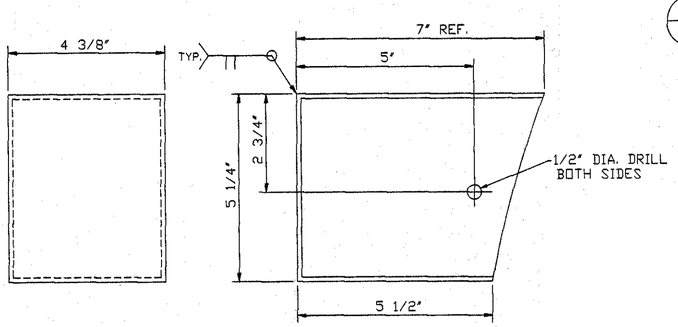

MATERIAL = 11 GA. STEEL
VALVE PROTECTOR
DETAIL A
SCALE 6"= 1'-0"

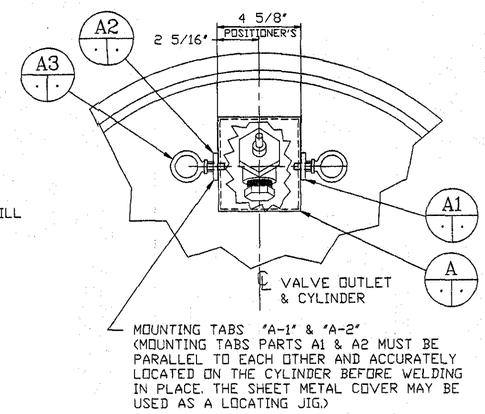

VALVE PROTECTOR ASS'Y
DETAIL B
SCALE NONE

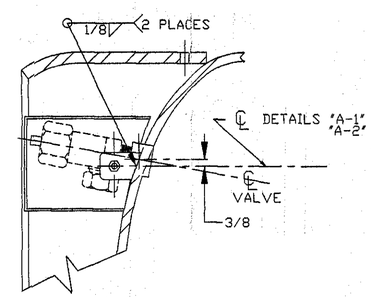

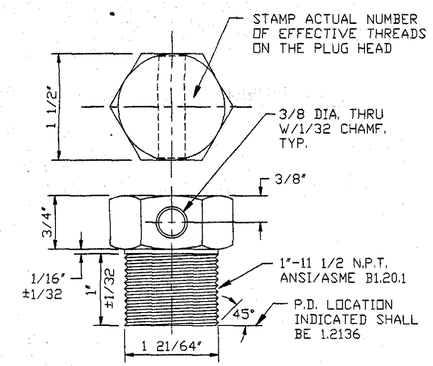

PLUG DETAIL D
SCALE FULL

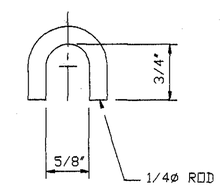

SEAL LOOP
DETAIL E
SCALE FULL

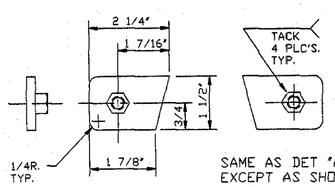

SAME AS DET "A-1" EXCEPT AS SHOWN

MATERIAL = 1/4" THICK STEEL. 3/8-16 NC HEX NUT SS 304
MOUNTING TABS
DETAIL A1
SCALE 6"= 1'-0"
DETAIL A2
SCALE 6"= 1'-0"

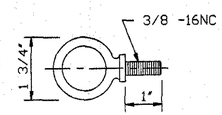

MATERIAL = STAINLESS STEEL
SHOULDER EYE BOLT
(2- REQ'D)
DETAIL A3
SCALE 6"= 1'-0"

SAFETY SYSTEM NOTE:
THE "Z" SUFFIX IN THIS DRAWING NO. INDICATES THAT THIS DRAWING HAS A SAFETY SYSTEM THAT MAY NOT BE ALTERED OR CHANGED EITIHER FUNCTIONALLY OR PHYSICALLY WITHOUT AUTHORIZATION FROM CONFIGURATION MANAGEIMENT.

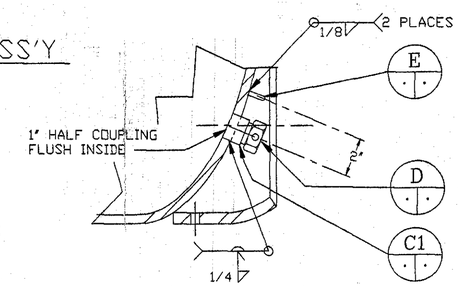

DETAIL C
SCALE NONE

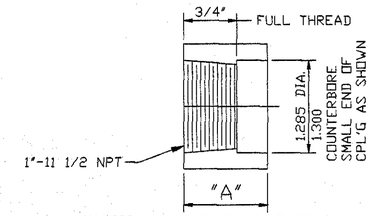

MATERIAL = 1", 6000# HALF CPL'G MODIFIED AS SHOWN
DETAIL C1
SCALE FULL
"A"= 1"
DETAIL C2
SCALE FULL
"A"= 1 3/16"

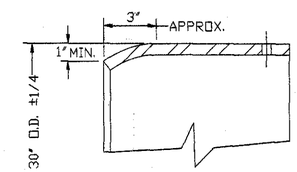

TYPICAL SKIRT DETAIL
DETAIL F
SCALE NONE

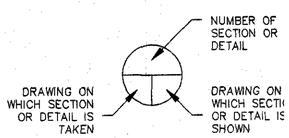

SECTION & DETAIL KEY

UF6 CYLINDER
MODEL 30B