⚠ TO BE STAMPED ON VALVE END CHIME IN VICINITY OF VALVE, USING 3/8" STAMPS:

DOT 106A 500 X
MATERIAL ASTM A285 GR. A
CO. REG. I.D. SYMBOL
SERIAL NUMBERS
INSPECTOR'S MARK
YEAR BUILT
WATER CAPACITY IN lbs.

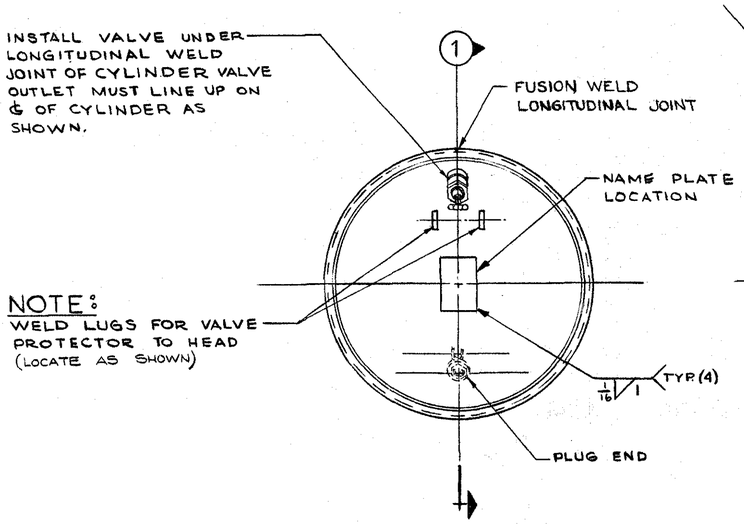

NOTE:
WELD LUGS FOR VALVE PROTECTOR TO HEAD (LOCATE AS SHOWN)

VALVE END

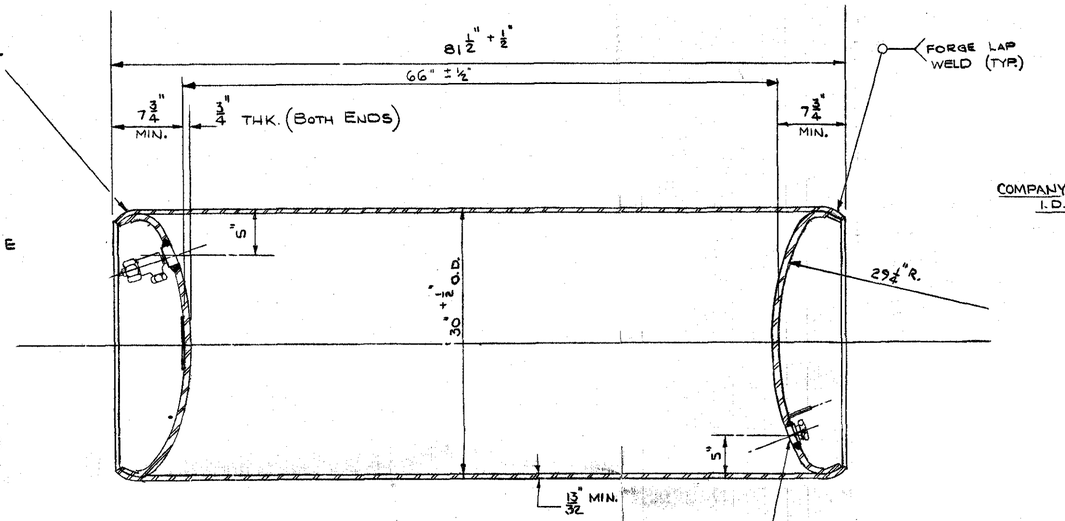

SECTION 1

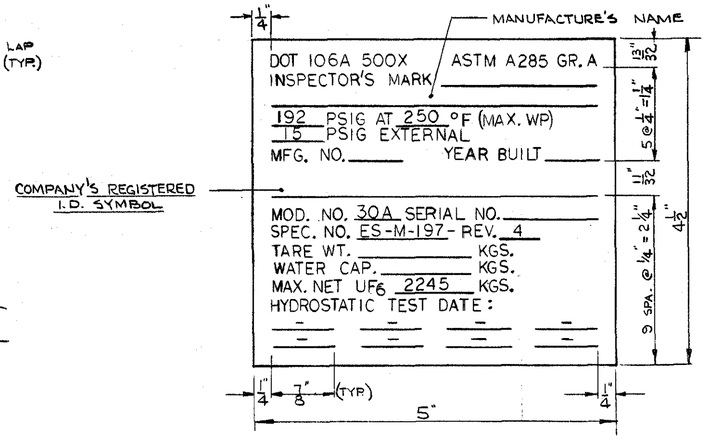

⚠ CYLINDER NAMEPLATE DATA
FULL SCALE

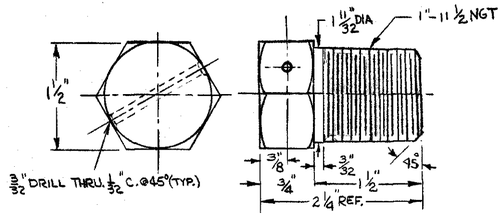

PLUG ⚠

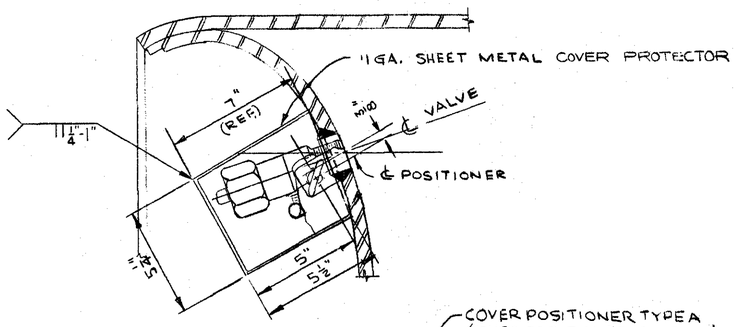

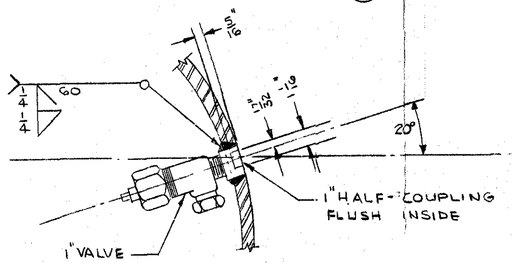

VALVE

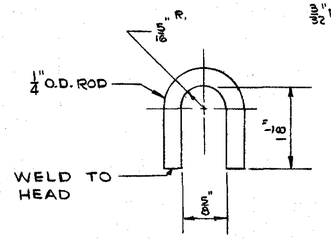

SEAL LOOP "A"

NOTE:
DIMENSIONAL TOLERANCE ± 1/16"
UNLESS OTHERWISE SPECIFIED
ANGULAR TOLERANCE ± 2°

GENERAL NOTES

1. IT IS RECOMMENDED THAT NEW PROCUREMENT BE IN ACCORDANCE WITH SPEC. NO. ES-M-198, CYLINDER MODEL 30B

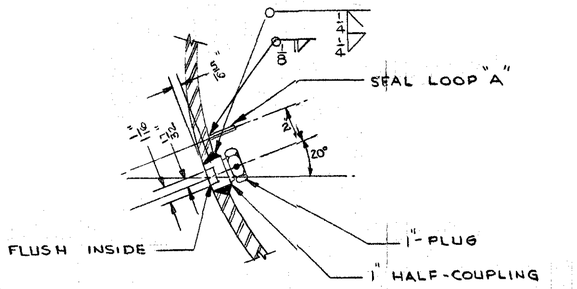

DETAIL OF OPTIONAL PLUG

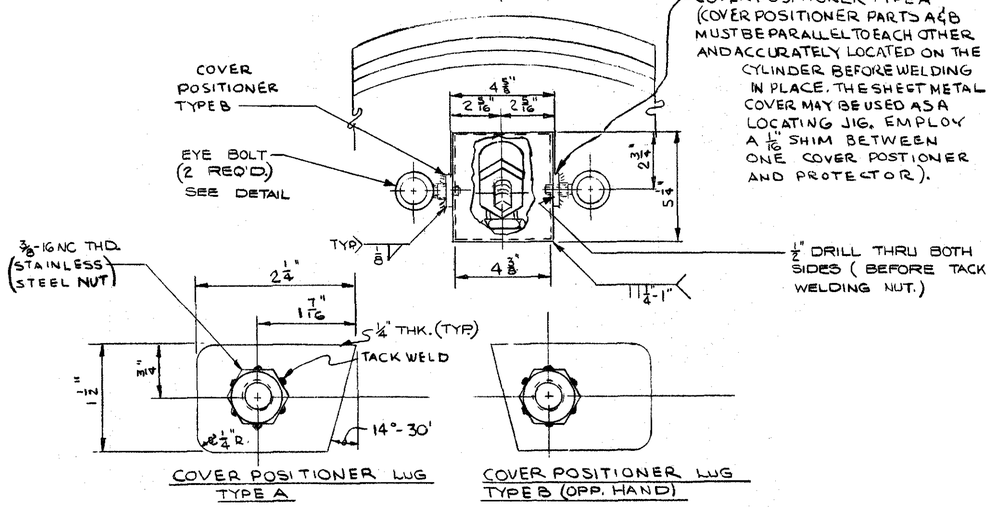

COVER POSITIONER LUG TYPE A

COVER POSITIONER LUG TYPE B (OPP. HAND)

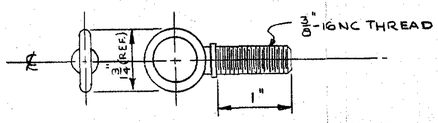

SHOULDER EYE-BOLT DETAIL
(MAT'L - STAINLESS STEEL)

ORGDP D-P 35721E
ES-M-197

UF6 CYLINDER MODEL 30A