GENERAL NOTES

1. FILLET WELDS SHALL BE IN ACCORDANCE WITH AWS D1.1-83 SECTION 3.6 IN ADDITION TO THE REQUIREMENTS OF ASME DIVISION I SECTION VIII
2. ACCEPTABLE REPLACEMENTS PARTS:

VALVE	EQUIPMENT SPECIFICATION JSP-532
PLUG	DRAWING M5E-16092-A
VALVE GUARD	PER ANSI M14.1

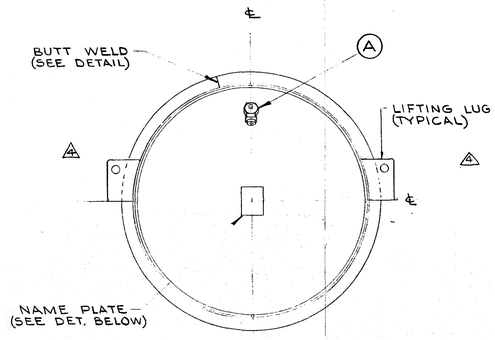

VALVE END

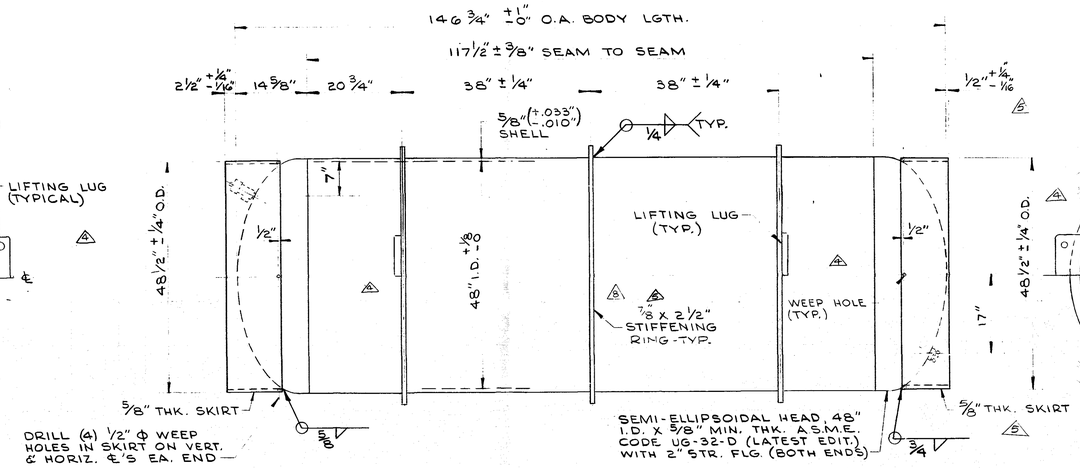

SIDE ELEVATION

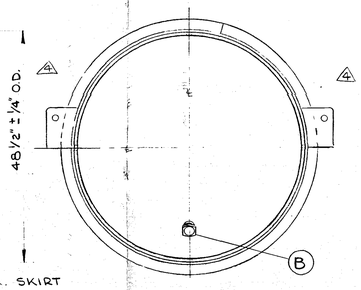

PLUG END

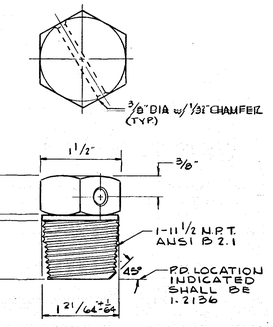

DETAIL-HEX HEAD PLUG

MATL: ALUMINUM BRONZE, CDA ALLOY 613 ASTM B-150 UPSET FORGED, EXTRUDED OR EXTRUDED AND DRAWN

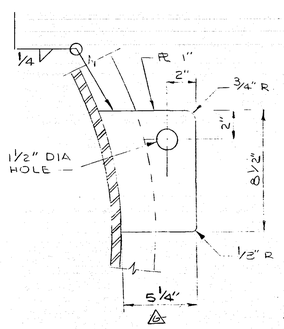

LIFTING LUG

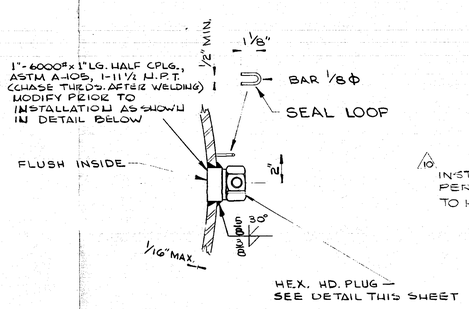

PLUG (B)

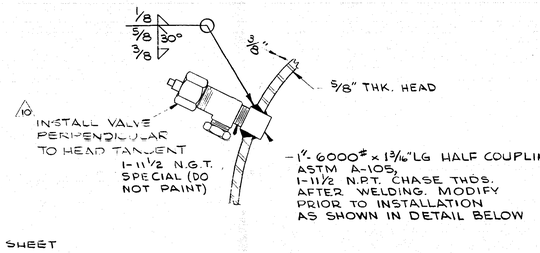

VALVE (A)

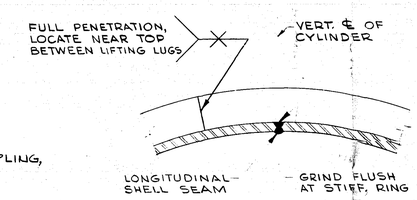

JOINT WELD IN STIFFENING RING

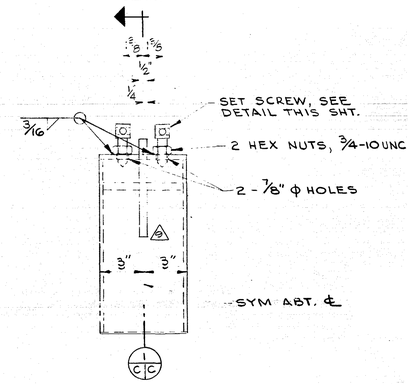

VALVE PROTECTOR

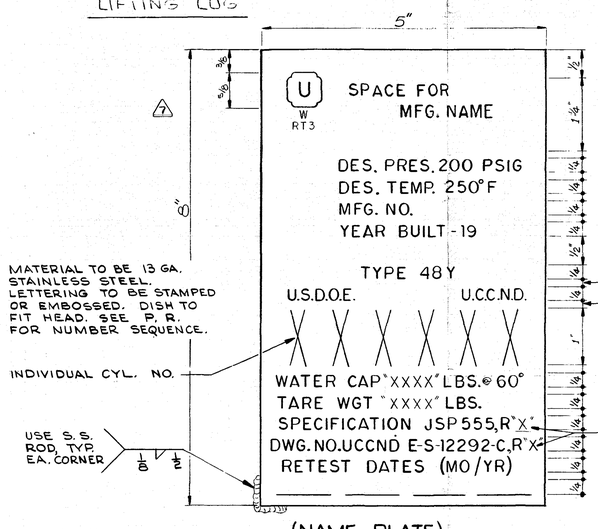

(NAME PLATE)
(DO NOT PAINT)

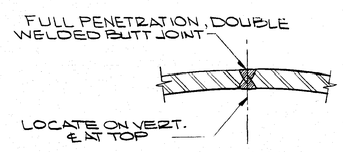

LONGITUDINAL SHELL SEAM

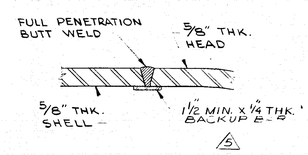

HEAD TO SHELL SEAM

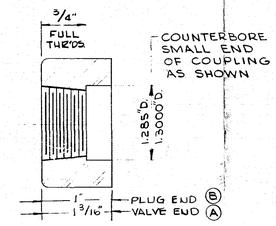

MODIFICATION TO 1"-6000# HALF CPL'G.

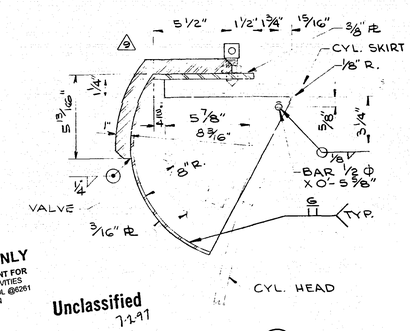

SECTION (1 C/C)

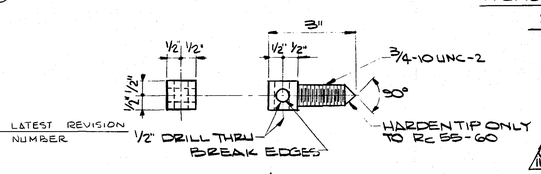

SET SCREW DETAIL

SAFETY SYSTEM NOTES:

1. THIS DRAWING CONTAINS SYSTEMS, STRUCTURES, COMPONENTS AND DESIGN FEATURES CREDITED FOR SAFETY.
2. MODIFICATIONS REQUIRE THE FULL RIGOR OF THE CONFIGURATION MANAGEMENT PROGRAM.

TO BE USED FOR INFORMATION ONLY
DO NOT USE THIS DOCUMENT FOR MAINT. OR OPERATIONS ACTIVITIES
CONTACT DOCUMENT CONTROL @6261 FOR LATEST REVISION

Unclassified
7-2-97

CYLINDER
TYPE 48Y

TYPE 48Y PRODUCT CYLINDER