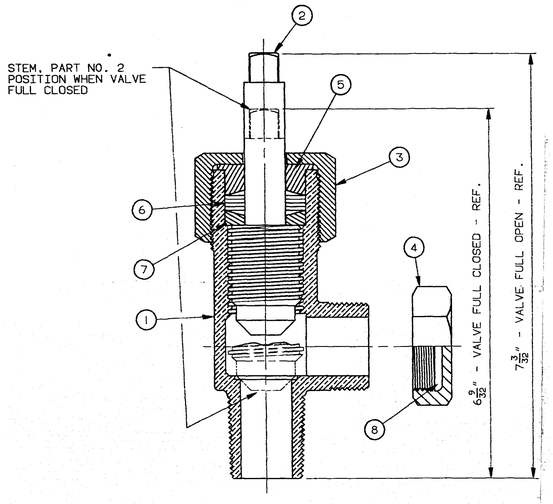

ASSEMBLY

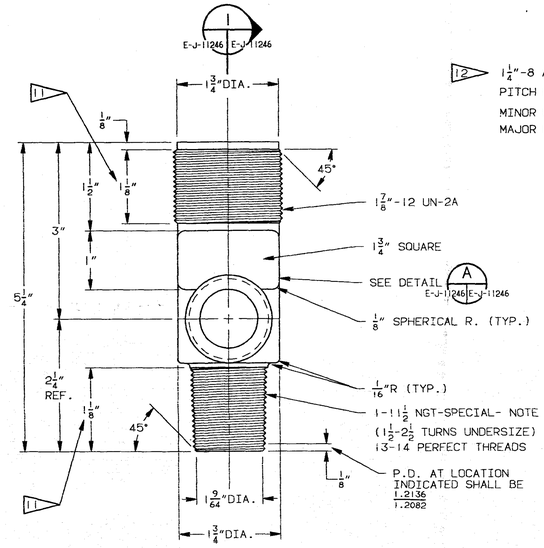

BODY - PART 1

1 REQ'D.

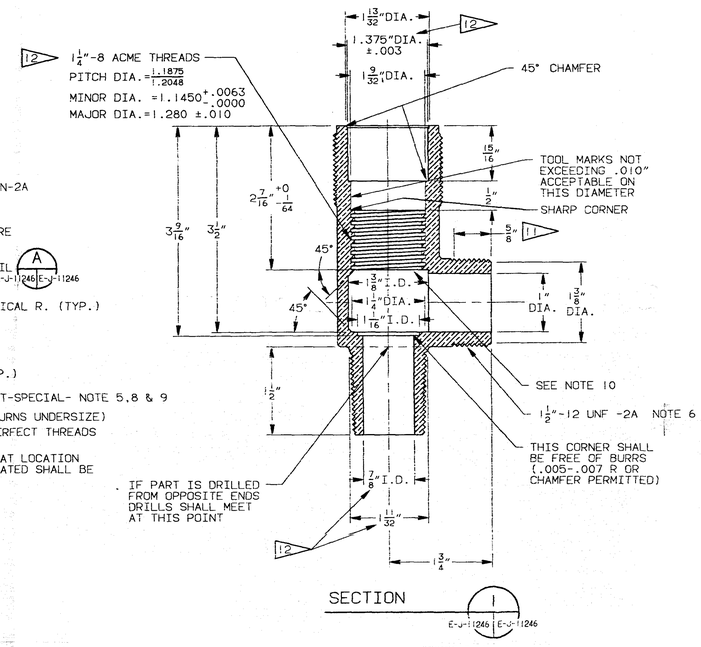

SECTION

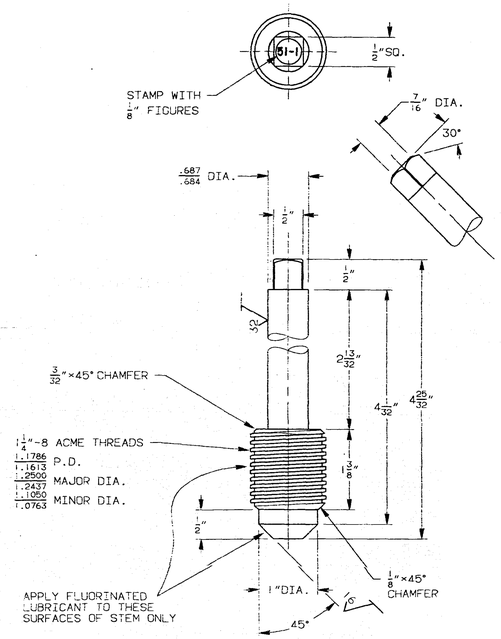

STEM - PART 2

1 REQ'D.

FORGE, STAMP OR ENGRAVE SELLER'S NAME, VALVE NUMBER AND REVISION NUMBER

SELLER'S NAME

1246 51-1

VALVE NO. — REV. NO.

1/8" FIGURES

DETAIL A

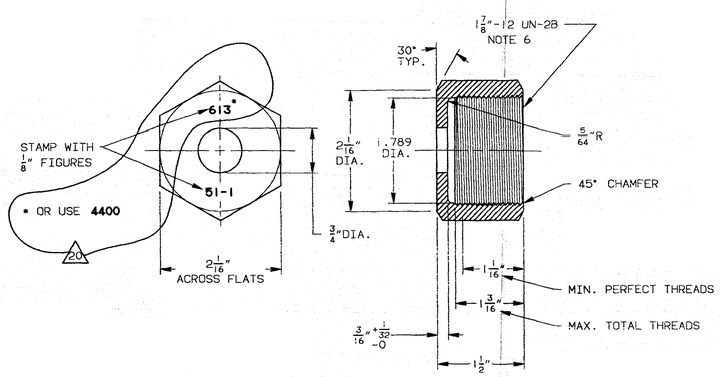

PACKING NUT - PART 3

1 REQ'D.

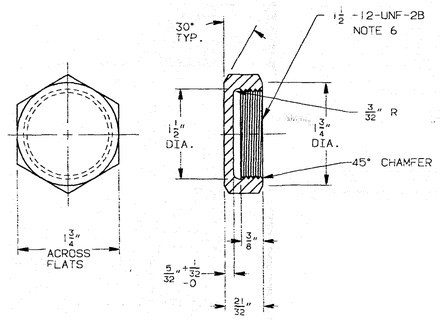

CAP - PART 4

1 REQ'D.

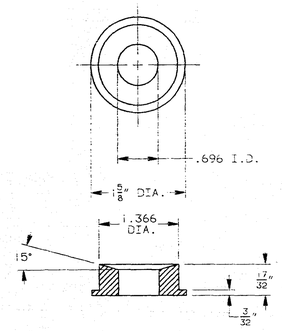

PACKING FOLLOWER - PART 5

1 REQ'D.

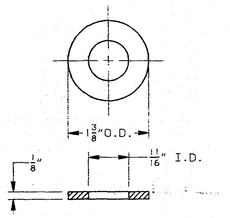

PACKING - PART 6

4 REQ'D.

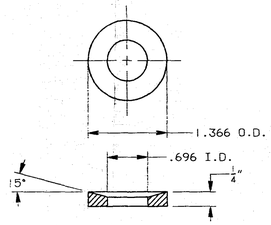

PACKING RING - PART 7

1 REQ'D.

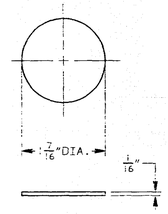

CAP GASKET - PART 8

1 REQ'D.

STORES PROCUREMENT	APPD.	DATE

REFERENCES:

SPECIFICATION JSP-532

NOTES:

1. DESIGN PRESSURE: 25 PSIG EXTERNAL & 200 PSIG INTERNAL @ 40°F TO 250°F
2. SEE UCC-ND SPECIFICATION JSP-532 FOR MATERIALS OF CONSTRUCTION AND CERTIFICATION REQUIREMENTS.
3. VALVES SHALL BE MANUFACTURED, TESTED, INSPECTED AND PACKAGED IN ACCORDANCE WITH JSP-532.
4. ALL MACHINED SURFACES SHALL BE FINISHED TO 63 MICRO-INCHES, UNLESS OTHERWISE NOTED. REMOVE ALL BURRS, BREAK SHARP CORNERS.
5. 1"-11-1/2 NGT THREAD PER ANSI/CGA V-1-87, EXCEPT P.D. TO BE GAGED 1/8" FROM SMALL END (1-1/2 TO 2-1/2 TURNS UNDERSIZE).
6. 1-1/2"-12 UNF AND 1-7/8"-12 UN AND 1-1/2"-12 UNF-2A THREADS PER ANSI STANDARD B1.1-89.
7. EACH VALVE SHALL BE TESTED AT 400 PSIG. IN ACCORDANCE WITH JSP-532.
8. 1"-11-1/2 NGT THREAD IS TO BE TINNED WITH A UNIFORM COATING OF TIN-LEAD SOLDER ALLOY SN50. USE FLUX SUITABLE FOR AL-BRZ., ALLOY 636. REMOVE EXCESSIVE SOLDER AND ALL RESIDUAL FLUX DO NOT FILL THREAD ALLOYS. FILL THREAD VALLEYS 1/2 FULL LENGTH. (20)
9. COVER 1"-11-1/2 NGT THREAD WITH CAPLUG OR SIMILAR FITTING TO PROTECT THE THREADS AND TO KEEP THE VALVE INLET CLEAN DURING SHIPPING AND STORAGE.
10. OUTLET CAN BE COUNTERBORED 1/16" AT THIS LOCATION (WITH 45° CHAMFER), IF DESIRED, TO PREVENT BURR FORMATION.

11. THESE DIMENSIONS INDICATE THE LENGTH OF PERFECT THREADS.
12. THESE DIAMETERS SHALL BE CONCENTRIC WITH EACH OTHER TO WITHIN .020 T.I.R.

1" SIZE VALVE FOR UF_6 CYLINDER 51-1
PRIORITY 3