02-197N -- TEST OF CRITICAL ISSUES OF THE INJECTOR SYSTEM AND ENGINEERING DESIGN AND FABRICATION OF COLD MODEL OF 57.5 MHZ DRIVER RFQ

Principal Investigators: Peter N. Ostroumov, Physics
N.E. Vinogradov, Physics
S.I. Sharamentov, Physics
A.A. Kolomiets, Physics
A. Barcikowski, Technology Development
E. Rotela, Advanced Photon Source

Funding Profile:
FY 2000 $0K
FY 2001 $0K
FY 2002 $547K
FY 2003 $0K
FY 2004 $0K

Purpose: The injector system of the Rare Isotope Accelerator (RIA) driver linac will consist of an Electron Cyclotron Resonance (ECR) ion source, a Low Energy Beam Transport (LEBT), a 57.5 MHz radio frequency quadrupole (RFQ) and a Medium Energy Beam Transport (MEBT). The present-day performance of ECR ion sources, and considerations based on fundamental limiting processes in the formation of high-charge state uranium ions in such sources, indicate that uranium beam intensities as high as 7 pμA in a single charge state of 28+ or 29+ are unlikely to be obtained in the near future. Such a high current is required in order to produce the RIA driver linac design goal of a 400 kW uranium beam, even if we assume multiple charge state beam acceleration following the first stripper. A solution to this limitation is an acceleration of two-charge-state heavy ion beams in the front end of the RIA driver linac. The purpose of this LDRD project is to develop and test design concepts for a major component of the injector system of the RIA driver linac, namely a two-charge state operation of the LEBT and 57.5 MHz continuous wave (cw) RFQ. The injector system is a key component of the new technique to obtain high intensity heavy ion beams.

Approach: The concept of the two-charge state beam acceleration in the injector system is new but based on existing technical components. The extraction and separation of dual charge state beam will be done on the base of achromatic bending system downstream of the ECR which is placed on high voltage (HV) platform. The best beam quality in longitudinal phase space can be obtained with the help of multi-harmonic buncher followed by cw RFQ. We have developed simulation codes and applied it for the design of the injector system for the RIA driver linac. The 57.5 MHz RFQ was designed and the drawings for both the cold model and the engineering test model have been completed. The cold model is being fabricated and will be ready for testing under a parallel LDRD project in February 2003.

Technical Progress and Results: We have designed LEBT for the selection and separation of the required ion species and the acceptance of one- or two-charge states

by the following RFQ structure. The first portion of the LEBT is an achromatic bending magnet section for charge-to-mass analysis and selection. For the heaviest ions, such as uranium ions, the transport system can deliver to the entrance of the first buncher a two-charge-state beam with similar Twiss parameters for both charge states. The design features of the two-charge selector was discussed at the recent RIA Driver Workshop. The ECR is placed on a high-voltage platform. The voltage V_0=100 kV is adequate to avoid space charge effects in the LEBT and RFQ and to keep the RFQ length to less than 4 m. The reference charge state for the design of the LEBT, RFQ and MEBT is 28.5 for uranium beam. The 57.5 MHz RFQ is designed to accelerate any beam from protons to uranium to a velocity v/c = 0.02046 at the exit of the RFQ. In order to match two-charge-state ions with masses different from uranium, the straight section of the LEBT upstream of the RFQ will be placed on high-voltage platform. A voltage ~30 kV is required in order to match velocities of lighter ions and maintain the possibility to accelerate two charge states simultaneously. For any mass number A with charge state q_0, the ECR voltage must be adjusted in order to match average velocity of the two-charge-state beam to the RFQ acceptance. The voltage of the LEBT section is adjusted to obtain required time-of-flight between two bunchers of the LEBT.

The current status of the LEBT design is sufficient in order to build the test model of the LEBT. One possibility is to site the 2q-LEBT test model at the ATLAS ECR-II ion source. This will allow sharing of source RF power and other systems with the existing ATLAS facility and will save considerable effort and costs. A preliminary beamline layout has been developed under these assumptions and appears feasible.

The principal specifications of the RFQ for the RIA driver linac are: 1) maintain extremely low longitudinal emittance formed by the multiharmonic buncher; 2) stable operation over a wide range of voltage for acceleration of various ion species needed for RIA operation; 3) simultaneous acceleration of two-charge states of uranium ions. Continuous wave operation of an accelerating structure leads to a number of requirements for the resonators such as high shunt impedance, efficient water cooling of all parts of the resonant cavity, mechanical stability together with precise alignment, reliable RF contacts, a stable operating mode, and fine tuning of the resonant frequency during operation.

The selection of the proper RFQ cavity operating at 57 MHz in cw regime is still a challenge. Several types of resonant structures have been analyzed in order to satisfy all specifications. As a result we propose a novel RFQ structure which combines the advantages of the four-vane structure and the split-coaxial structure which has been discussed in several publications (see below). This structure provides high shunt impedance, relatively simple mechanical design, moderate diameter and large frequency separation of the operating and non- operating modes. Electrodynamics simulations of the cavity have been carried out using the 3D codes. The results of electrodynamics calculations were used for detailed finite element analysis of the thermal and mechanical properties of the cavity and the initial preliminary engineering design of the RFQ. The design addresses the requirements for efficient cooling throughout the structure, precise alignment, reliable RF contacts, and fine tuning

capability. The favored approach employs furnace brazing for fabrication of details and complete RFQ segments. Six longitudinal segments are mechanically assembled to form the complete 4-meter RFQ structure. The design requirements are driven by the need for operation over a range of cavity power of 0.65 kW to 48 kW to allow acceleration of masses from protons up to uranium. It is desirable to operate without the use of mechanical tuners. Therefore, the goal of the design was to arrive at a configuration that, via manipulation of cooling water temperature, can maintain a single operating frequency over this wide range of power levels. The RFQ is designed as a 100% oxygen free copper (OFE) structure with either Glidcop or 304 stainless steel end flanges on each segment. The complete RIA RFQ comprises six nearly identical brazed segments that are bolted together to form the complete structure. The fabrication process for a segment begins with machining of the cooling channels into oversized OFE copper blanks and performing a high temperature braze for assembly. We currently expect to use up to 4 different alloys for the brazing of a complete segment.

The 1:1 scale aluminum cold model of the 57.5 MHz Driver Linac RFQ has been developed and is being constructed. Figure 1 shows assembly drawings of the RFQ segment. The first segment of the RFQ will be fabricated in January 2003. The cold model will be used for detailed electrodynamics studies and testing of critical steps of high-precision mechanical assembly. The complete study of the cold model will be performed in 2003.

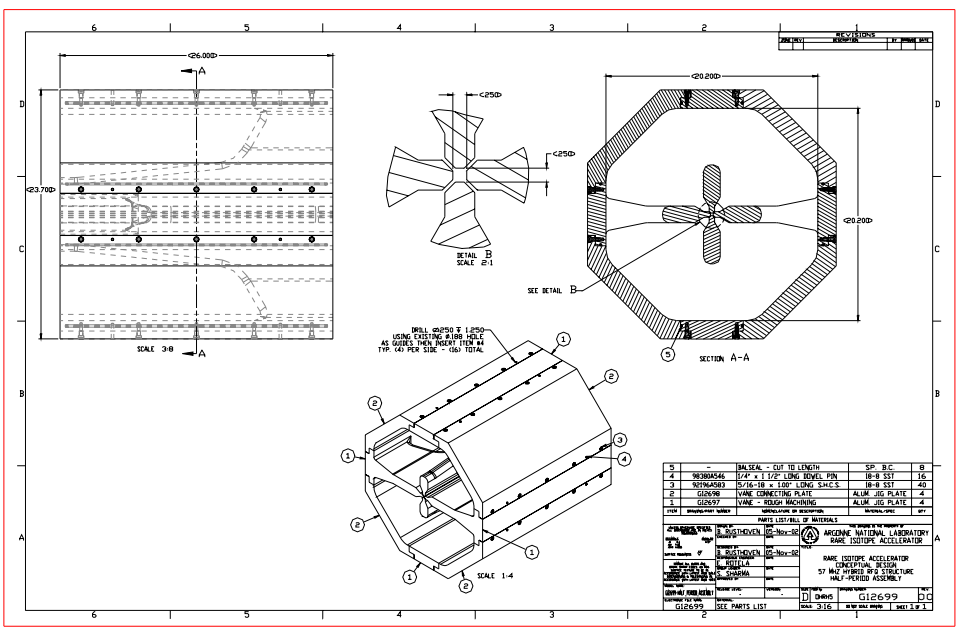

Fig. 1. Assembly drawings of the RFQ segment.

Specific Accomplishments: The results of the studies have been published in *Physical Review* and have been reported at the LINAC-2002 International Conference and RIA Driver Workshop-II.

P.N. Ostroumov, A.A. Kolomiets, D.A. Kashinsky, S.A. Minaev, V. Pershin, T.E. Tretyakova, and S.G. Yaramishev, Design of 57.5 MHz CW RFQ for Medium Energy Heavy Ion Superconducting Linac, *Phys. Rev. ST, Accel. Beams*, **5**:060101 (2002).

P.N. Ostroumov, Overview of the Front-End Design, RIA Driver International Workshop II, Argonne National Laboratory (May 22-24, 2002).

A.A. Kolomiets, 57.5 MHz RFQ Design, RIA Driver International Workshop II, Argonne National Laboratory (May 22-24, 2002).

P.N. Ostroumov, and A.A. Kolomiets (ANL), T.J. Schultheiss, J.W. Rathke (AES), RF,Thermal and Structural Analysis of the 57.5 MHz CW RFQ for the RIA Driver Linac, presented at the XXI International LINAC Conference (LINAC2002), Gyeongju, Korea (August 19-23, 2002).

P.N. Ostroumov, A.A. Kolomiets (ANL), J.W. Rathke, T.J. Schultheiss (AES), and D.L. Schrage (LANL), Preliminary Engineering Design of a 57.5 MHz CW RFQ for the RIA Driver Linac, presented at the XXI International LINAC Conference (LINAC2002), Gyeongju, Korea (August 19-23, 2002).